HOUSEHOLD GOODS DESCRIPTIVE INVENTORY

TAG COLOR _____ NOS. _____ THRU _____

PAGE NO. _____ NO. OF PAGES _____

CONTRACTOR OR CARRIER	AGENT	CARRIER'S REFERENCE NO.
OWNER'S GRADE OR RATING AND NAME		CONTRACT OR GBL. NO.
ORIGIN LOADING ADDRESS	CITY _____ STATE _____	GOV'T. SERVICE ORDER NO.
DESTINATION		VAN NUMBER

DESCRIPTIVE SYMBOLS: CP - Packed By Carrier; PSC - Packed By Carrier; CD - Carrier Disassembled; DBO - Disassembled by Owner; PB - Professional Books; PP - Professional Papers; PE - Professional Equipment; BEW - TV Black & White; C - TV Color; MCU - Mechanical Condition Unknown

EXCEPTION SYMBOLS: BE - Bent; BR - Broken; BU - Burned; CH - Chipped; CU - Contents and Condition Unknown; G - Gouged; F - Faded; G - Gouged; L - Loose; M - Marked; M - Mildew; MC - Multicolor; P - Peeling; R - Rubbed; RU - Rusted; SC - Scratched; SH - Short; SO - Sulfed; ST - Stained; S - Stretched; T - Torn; W - Badly Worn; Z - Cracked

NOTE: The presence of these symbols indicates partial condition.

LOCATION SYMBOLS: 1. Arm; 2. Bottom; 3. Corner; 4. Front; 5. Left; 6. Leg; 7. Rear; 8. Right; 9. Side; 10. Top; 11. Vertical; 12. Edge; 13. Center; 14. Seat; 15. Corner; 16. Inside; 17. Door; 18. Shelf; 19. Hardware

ITEM NO.	STE. CL./CR. REF.	ARTICLES	CONDITION AT ORIGIN	ROOM	EXCEPTIONS (IF ANY) AT DESTINATION

REMARKS/EXCEPTIONS _____

IMPORTANT NOTICE → BEFORE SIGNING – CHECK SHIPMENT, COUNT ITEMS AND DESCRIBE LOSS OR DAMAGE IN SPACE ON THE RIGHT ABOVE. IF FOR ANY REASON YOU WERE NOT GIVEN OPPORTUNITY TO INSPECT THIS SHIPMENT, YOU SHOULD CALL THIS TOLL FREE NUMBER, 800-348-3746.

"WE CHECKED ALL THE ITEMS LISTED AND SUMMARIZED ON THIS PAGE INCLUDING AND ACKNOWLEDGE THAT THIS IS A TRUE AND COMPLETE LIST OF THE GOODS TENDERED AND OF THE STATE OF THE GOODS RECEIVED"

AT ORIGIN	LOADING HAULER NAME & NUMBER (Signature)	DATE	AT DESTINATION	DELIVERING HAULER NAME & NUMBER (Signature)	DATE
	OWNER OR AUTHORIZED AGENT (Signature)	DATE		OWNER OR AUTHORIZED AGENT (Signature)	DATE

FORM 14 (REV. 10/83) PRINTED IN U.S.A.

Figure BE-1. Household Goods Descriptive Inventory

PACKING LIST OF HOUSEHOLD GOODS

Page 1 of

SHIPPING ACTIVITY OWNER (Name) (Rank or rate)

PACKED BY LOT NO. DATE

CONSIGNED TO (Name and complete address)

METHOD OF SHIPMENT

☐ Rail (LCL) ☐ Air Freight ☐ Motor Freight ☐ Water Other_____ (Specify)

Container No.	*Type of Container	Contents	Inv No.	Wt. (Lbs.)	Location of Condition	Cubic feet

*ABBREVIATIONS

FOR TYPE OF CONTAINER:	EXCEPTION SYMBOLS			LOCATION SYMBOLS	
NW - Nailed Wood	BR - Broken	F - Faded	R - Rubbed	B - Bottom	RT - Right
FB - Fiber Board	BU - Burned	G - Gouged	SC - Scratched	C - Corner	S - Side
OC - Open Crate	CH - Chipped	GC - Good Condition	SO - Soiled	F - Front	TOP - Top
BRL - Barrel	CU - Contents and Conditions Unknown	L - Loose	T - Torn	LEF - Left	LG - Leg
HGCC - Household Goods Consolidated Crate	D - Dented	M - Marred	Z - Cracked	RE - Rear	V - Veneer
		NW - Normal Wear	OR - Owner's Risk		

Packing List of Household Goods

Figure BE-2. Packing List of Household Goods

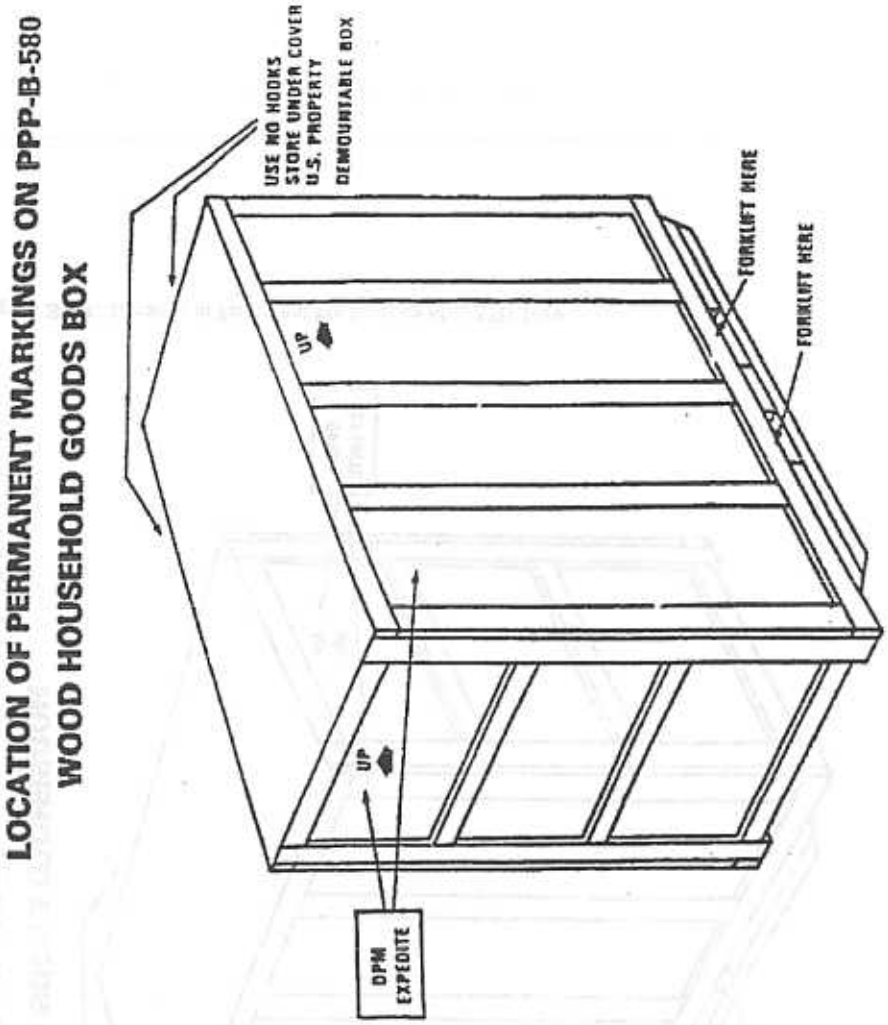

Figure BE-3. Location of Permanent Markings on PPP-B-580

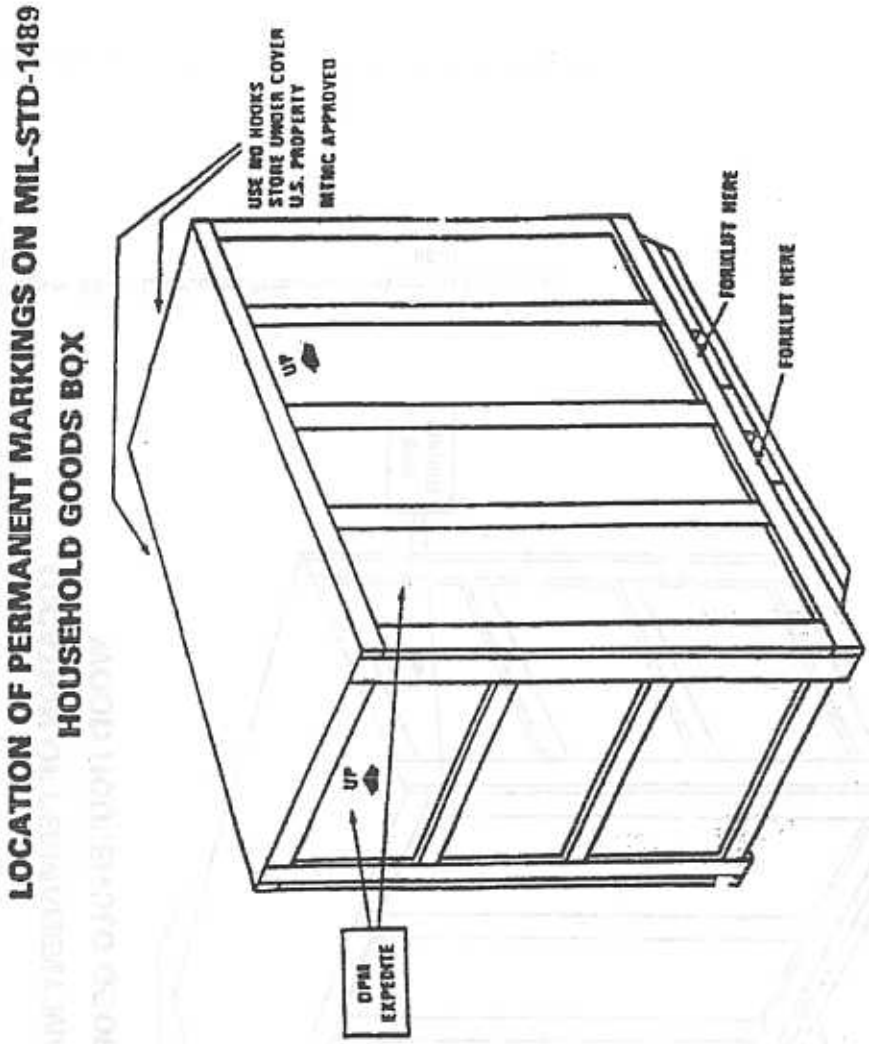

Figure BE-4. Location of Permanent Markings on MIL-STD 1489

MARKING OF UNACCOMPANIED BAGGAGE

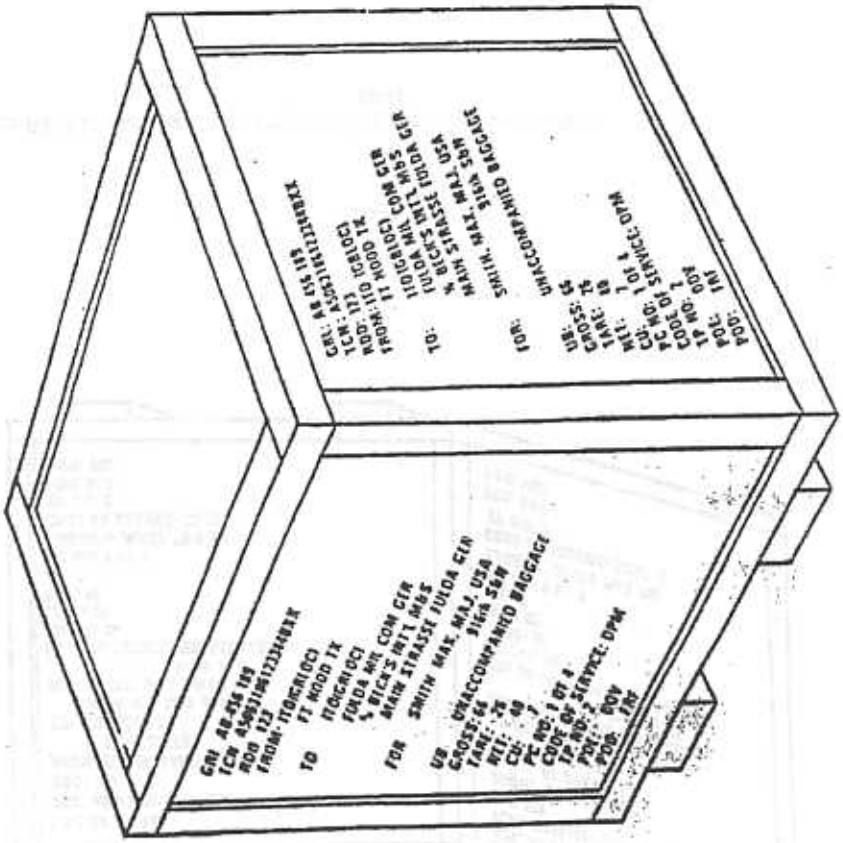

Figure BE-7. Marking of Unaccompanied Baggage (DPM)

MARKING OF UNACCOMPANIED BAGGAGE SHIPMENTS (CODE J)

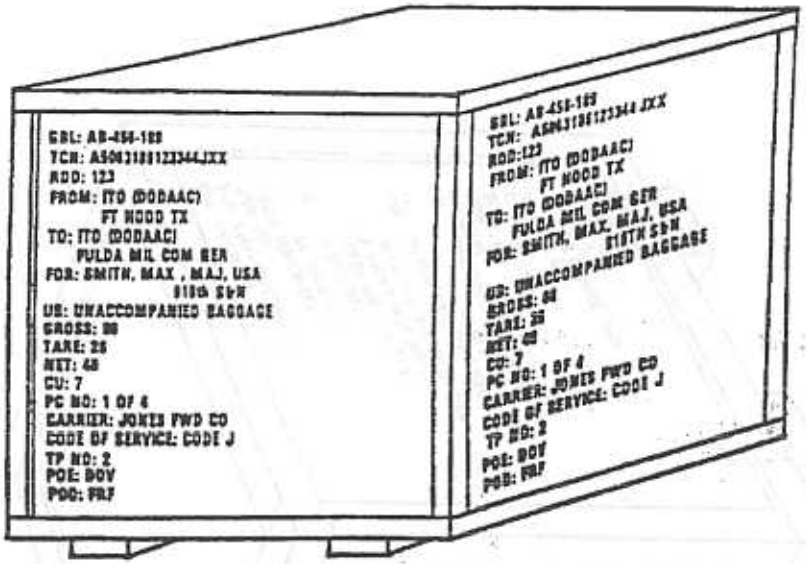

Figure BE-7.1. Marking of Unaccompanied Baggage Shipment (Code J)

MILITARY SHIPMENT LABEL		Form Approved. OMB No. 0704-
1. TRANSPORTATION CONTROL NUMBER A5063186123344BX		2. POSTAGE DATA
3. FROM ITO- Ft HOOD		4. TYPE SERVICE DPM
5. SHIP TO/POE APOE-		6. TRANS PRIORITY 2
7. POD POD-		8. PROJECT
9. ULTIMATE CONSIGNEE OR MARK ITO- FULDA MIL COM %BECK'S INT'L MAIN Strasse, FULDA, FOR: SMITH, MAX, MAJ 916th	10. WT (This piece) Gross 166	11. RDD 123
	12. CUBE (This piece) 14	13. CHARGES
	14. DATE SHIPPED	15. FMS CASE NUMBER
	16. PIECE NUMBER 1	
	17. TOTAL PIECES 4	

DD FORM 1387, NOV 86 Previous editions are obsolete.

Figure BE-8. Sample of Military Shipment Label for Unaccompanied Baggage (DD Form 1387)

JOINT STATEMENT OF LOSS OR DAMAGE AT DELIVERY

Privacy Act Statement

AUTHORITY: The requested information is solicited pursuant to one or more of the following: 5 U.S.C. 301, 31 U.S.C. 3721 et seq., 31 U.S.C. 3711 et seq., and EO 9397, November 1943 (SSN).

PRINCIPLE PURPOSE(S): The information requested is to be used in evaluating claims.

ROUTINE USE(S): The information requested is used in the settlement of claims for loss, damage or destruction of personal property and recovery from liable third parties.

DISCLOSURE: Voluntary; however, failure to supply the requested information or to execute the form may delay or otherwise hinder the payment of your claim.

GENERAL INSTRUCTIONS: The carrier's/contractor's representative will complete and sign DD Form 1840 and obtain the signature of the member or member's agent. The member or member's agent will not, under any circumstances, sign a blank or partially completed DD Form 1840. Three completed copies of DD Form 1840 and blank DD Forms 1840R will be provided the member or member's agent by the carrier's/contractor's representative for each shipment. If no loss or damage is involved, write "NONE" in description column.

SECTION A - GENERAL *(To be completed by carrier/contractor)*

1. NAME OF OWNER (Last, First, Middle Initial)	2. SOCIAL SECURITY NO.	3. RANK OR GRADE	4. NET WT OF SHIPMENT

5. ORIGIN OF SHIPMENT (City and State/Country)	6. DESTINATION OF SHIPMENT (City and State/Country)

7. PPGBL/ORDER NUMBER	8. PICKUP DATE	9. NAME AND ADDRESS OF CARRIER/CONTRACTOR

10. CODE OF SERVICE	11. SCAC	12. CARRIER/CONTR REF. NO.

SECTION B - RECORD OF LOSS OR DAMAGE *(To be completed jointly by member and carrier's/contractor's representative)*

13. Notice is hereby given to the carrier/contractor to whom this statement is surrendered that the shipment was received in condition as shown below and the claim, if any, will be made for such loss or damage as indicated subject to further inspection and notification to the claims office within 70 days by DD Form 1840R found on the reverse side hereof. **THE VALUE INDICATED IN BLOCK 14c IS TO BE USED FOR QUALITY CONTROL ONLY.**

a. Inv. No.	b. Name of item	c. Description of loss or damage *(If missing, so indicate)*

14. ACKNOWLEDGMENT BY MEMBER OR AGENT *(X and complete as applicable and sign below)*

a. I received my property in apparently good condition except as indicated above. A continuation sheet ☐ was ☐ was not used.

b. Unpacking and removal of packing material, boxes, cartons, and other debris ☐ is ☐ is not waived.

c. I estimate the amount of my loss and/or damage at $

d. I have received three copies of this form. I understand that I have 70 days to list any further loss and/or damages on the back of this form and give this to the nearest claims office, and that failure to do so may result in my being paid a smaller amount on a claim.

e. Telephone Number

f. Date Signed

g. Signature

15. ACKNOWLEDGMENT BY CARRIER'S/CONTRACTOR'S REPRESENTATIVE *(X and complete as applicable and sign below)*

a. Property was delivered in apparently good condition except as otherwise noted above.

b. I will initiate tracer action for missing items.

c. Name of delivering carrier/agent/contractor

d. Storage in transit? ☐ Yes ☐ No

e. Signature

f. Date Signed

DD Form 1840, JAN 88 *Previous editions are obsolete.* PAGE OF PAGES

Figure BE-9. Joint Statement of Loss and Damage at Delivery (DD Form 1840)

NOTICE OF LOSS OR DAMAGE

INSTRUCTIONS TO MEMBER: You have up to 70 days to inspect your property and note all loss or damage. Should you find any loss or damage not reported on DD Form 1840 at the time of delivery, complete Section A below. Use only ball-point pen or typewriter. THE COMPLETED FORM MUST BE DELIVERED TO YOUR LOCAL CLAIMS OFFICE NOT LATER THAN 70 DAYS FROM DATE OF DELIVERY. FAILURE TO DO SO MAY RESULT IN A REDUCTION OF THE AMOUNT PAYABLE ON YOUR CLAIM. Keep a copy of this form for your records, receipted and dated by the claims office. If more than one page is needed, please number the pages.

SECTION A - *(To be completed by member)*

1. STATEMENT OF PROPERTY LOSS OR DAMAGE: You are hereby notified of the loss or damage in the following shipment of personal property.

a. Name of Member *(Last, First, Middle Initial)*	b. PPGBL/Order Number	c. Date of Delivery

d. Origin of Shipment *(City and State/Country)*	e. Destination of Shipment *(City and State/Country)*

f. You are further notified that property owner intends to present a claim for this loss and/or damage. You are hereby extended an opportunity to inspect the property.

2. LIST OF PROPERTY LOSS / DAMAGE *(NOTE: Tracer action is requested for items listed as missing)*

a. Inv. No.	b. Name of Item	c. General Description of Loss or Damage *(If missing, so indicate)*

SECTION B - *(To be completed by claims office)*
(NOTE: Mail original to home office of carrier/contractor listed in item 9 on DD Form 1840)

3. TO *(Home Office of Carrier/Contractor)*

a. Name and Address *(Street Address, City, State, and Zip Code)*	b. Date of Dispatch

4. YOUR REPRESENTATIVE MAY CONTACT THIS CLAIMS OFFICE FOR ASSISTANCE

a. Name and Address of Claims Officer	b. Signature	
	c. Date Signed	d. Telephone Number

DD Form 1840R, JAN 88 *Previous editions are obsolete.* PAGE OF PAGES

Figure BE-10. Notice of Loss or Damage (DD Form 1840R)

Figure BE-11. Transportation Control and Movement Document

TRANSPORTATION CONTROL AND MOVEMENT DOCUMENT — PROJ NO

1. Doc Id	2. Trlr Cont	3. Consignor	4. Comm-Spec Hdlg	5. Air Dim	6. POE				7. POD		
8. Mode	9. Pack	10. Trans Control No	11. Consignee	12. Pri	13. RDD	14. Proj	15. Date Shpd		16. ETA	17. Tr Acct	
18. Carrier		19. Flight-Truck-Voy Doc No	20. Ref	21. Remarks				22. Pieces	23. Weight	24. Cube	

25a. Tranship Point (1)	b. Date Rec	c. Bay Whse	d. Date Shpd	e. Mode Carrier	f. Flight-Truck-Voy Doc No.	g. Ref	h. Stow Loc	i. Split	j. Cond	k. Signature-Remarks	
26a. Tranship Point (2)	b. Date Rec	c. Bay Whse	d. Date Shpd	e. Mode Carrier	f. Flight-Truck-Voy Doc No.	g. Ref	h. Stow Loc	i. Split	j. Cond	k. Signature-Remarks	
27a. Tranship Point (3)	b. Date Rec	c. Bay Whse	d. Date Shpd	e. Mode Carrier	f. Flight-Truck-Voy Doc No.	g. Ref	h. Stow Loc	i. Split	j. Cond	k. Signature-Remarks	
28. Consignee	29. Date Received-Offered (Sign)		30. Condition	31. Remarks							

32. Doc Id	33. Trailer-Container	34. Consignor Comm Abbr Other	35. Commodity Spec Hdlg	36. VOY NO Air Dim a	POE b	37. POD	38. MODE	39. Type Pack	40. Transportation Control Number	41. Consignee	42. PRI	43. REMARKS AND/OR RDD a	Proj b	Stow Loc Shpd c	ETA d	Tac e	44. ADDITIONAL REMARKS OR Pieces a	Weight b	Cube c

Form 1384, APR 66 (EG) — REPLACES EDITION — TUS, WHICH MAY BE USED — Designed using Perl — WHOOP, Jul 94

TECHNICAL EXHIBIT 1

REQUIRED REPORTS

Figure BE-13, Contract Data Requirements List (DD Form 1423), provides the required data. Figure BE-14, Data Item Description (DD Form 1664), provides the required format. The following are the abbreviations used and their meanings:

ASREQ	-	As Required
CO	-	Contracting Officer
DAC	-	Day after contract start
EAS	-	Each shipment
DS	-	Destination
PPSO	-	Personal Property Shipping Office
MTHLY	-	Monthly
N/A	-	Not applicable
ONE/R	-	One time with revisions
QTRLY	-	Quarterly
WKLY	-	Weekly

FIGURE BE-12. Technical Exhibit 1